ULTRASONIC CONTINUOUS LEVEL TRANSMITTER

with Very Small Sensor

LVU-1100 Series

$1531

MADE IN USA · 1 YEAR WARRANTY

- **Very Small Sensor with ¾" NPT Mounting Fits Into Existing ¾" Fitting Without Expensive Retrofitting or Modifications**
- **Programmable Zero, Span, and Two Alarm Setpoints**
- **Multi-Control Function Programming Capability**

Shown Smaller Than Actual Size

The LVU-1100 non-contact micromeasurement system uses very small sensor technology to fit into applications where ultrasonic, non-contact systems previously could not be used because the sensor was too large. The LVU-1100 consists of the transducer and state-of-the-art microprocessor-based electronics housed in a NEMA 7 explosion-proof enclosure. The microtransducer has a ¾" NPT mount for ranges from 1 to 12 feet. It will fit into hard-to-reach spaces such as existing capacitance system installations. Its small size and high accuracy make this sensor ideal for all types of liquid level measurement as well as product runout.

The sensor is mounted on the top of the tank. The electronics generates an electronic signal that is converted by the sensor to ultrasonic pulses that are transmitted through air space. At the liquid/air interface, the pulses are reflected back to the sensor. These echoes are received by the microprocessor in the electronics, which samples the returned echoes and calculates the level in the tank. A continuous output as well as two alarm setpoints (adjustable in increments of 0.1" over entire span) are provided to satisfy a number of applications. Programming is done through a pair of pushbutton entry switches and an internal display.

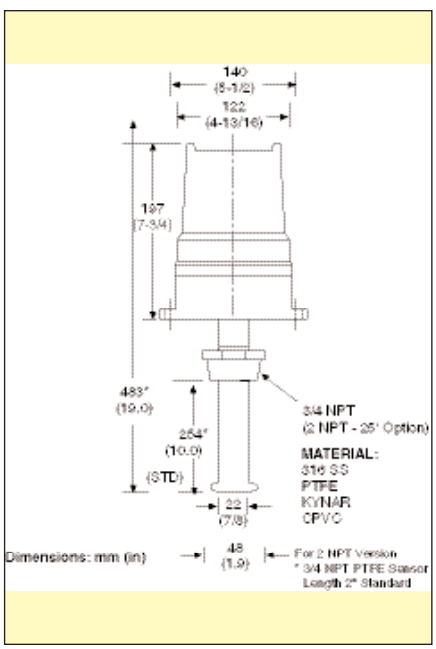

SPECIFICATIONS

Range: 1 to 12'; 1 to 25' with "-25FT" option

Repeatability: ⅛" typical

Accuracy: Analog output, ¼% FS

Temperature Compensation: Automatic over full range of sensor operating temperature

Input Power: 115 Vac 50/60 Hz standard; 230 Vac 50/60 Hz and 24 Vdc opt.

Output Signal: 4-20 mA dc (isolated)

Controls: Programmable zero and span, height and distance mode

Alarm Setpoints: Two independent programmable 10A SPDT relays, increments of 0.1" over span

Temperature Range: Sensor: -29 to 82°C (-20 to 180°F); Electronics: -23 to 76°C (-10 to 170°F)

Sensor:

Construction: CPVC, 316SS, Kynar, PTFE

Pressure Rating: 316SS: 250 PSIG; PTFE, Kynar, CPVC: 100 PSIG

Electronics Enclosure: NEMA-7 explosion-resistant; Class I, Divisions 1 and 2, Groups B, C, and D, Class II, Div 1 & 2, Groups E, F, and G. Class III, NEMA 3, 4, 7, and 9

Mounting: ¾" NPT: range up to 12'
2" NPT: range up to 30'

MOST POPULAR MODELS HIGHLIGHTED!

To Order *(Specify Model No.)*

Model No.	Price	Sensor Material
LVU-1101	$1531	CPVC
LVU-1102	1531	316SS
LVU-1103	1531	Kynar
LVU-1104	1531	PTFE

Comes with complete operator's manual.

*For 1-25' range, add suffix **"-25FT"** to model number and add **$175** to price. **NOTE:** The **"-25FT"** option has 2" NPT threads.*

*For 24 Vdc operation, add suffix **"-24V"** to model number, no additional cost.*

*For 230 Vac operation, add suffix **"-230V"** to model number, no additional cost.*

***Ordering Example: LVU-1103-24V** ¾" NPT transmitter, Kynar construction, 24 Vdc operation, **$1531**.*

omega.com®

Your One-Stop Source for Process Measurement and Control!

One Omega Drive | Stamford, CT 06907 | 1-888-TC-OMEGA (1-888-826-6342) | info@omega.com

www.omega.com

UNITED STATES
www.omega.com
1-800-TC-OMEGA
Stamford, CT.

CANADA
www.omega.ca
Laval(Quebec)
1-800-TC-OMEGA

GERMANY
www.omega.de
Deckenpfronn, Germany
0800-8266342

UNITED KINGDOM
www. omega.co.uk
Manchester, England
0800-488-488

FRANCE
www.omega.fr
Guyancourt, France
088-466-342

CZECH REPUBLIC
www.omegaeng.cz
Karviná, Czech Republic
596-311-899

BENELUX
www.omega.nl
Amstelveen, NL
0800-099-33-44

More than 100,000 Products Available!

- **Temperature**

Calibrators, Connectors, General Test and Measurement Instruments, Glass Bulb Thermometers, Handheld Instruments for Temperature Measurement, Ice Point References, Indicating Labels, Crayons, Cements and Lacquers, Infrared Temperature Measurement Instruments, Recorders Relative Humidity Measurement Instruments, RTD Probes, Elements and Assemblies, Temperature & Process Meters, Timers and Counters, Temperature and Process Controllers and Power Switching Devices, Thermistor Elements, Probes and Assemblies, Thermocouples Thermowells and Head and Well Assemblies, Transmitters, Wire

- **Flow and Level**

Air Velocity Indicators, Doppler Flowmeters, Level Measurement, Magnetic Flowmeters, Mass Flowmeters, Pitot Tubes, Pumps, Rotameters, Turbine and Paddle Wheel Flowmeters, Ultrasonic Flowmeters, Valves, Variable Area Flowmeters, Vortex Shedding Flowmeters

- **pH and Conductivity**

Conductivity Instrumentation, Dissolved Oxygen Instrumentation, Environmental Instrumentation, pH Electrodes and Instruments, Water and Soil Analysis Instrumentation

- **Data Acquisition**

Auto-Dialers and Alarm Monitoring Systems, Communication Products and Converters, Data Acquisition and Analysis Software, Data Loggers Plug-in Cards, Signal Conditioners, USB, RS232, RS485 and Parallel Port Data Acquisition Systems, Wireless Transmitters and Receivers

- **Pressure, Strain and Force**

Displacement Transducers, Dynamic Measurement Force Sensors, Instrumentation for Pressure and Strain Measurements, Load Cells, Pressure Gauges, Pressure Reference Section, Pressure Switches, Pressure Transducers, Proximity Transducers, Regulators, Strain Gages, Torque Transducers, Valves

- **Heaters**

Band Heaters, Cartridge Heaters, Circulation Heaters, Comfort Heaters, Controllers, Meters and Switching Devices, Flexible Heaters, General Test and Measurement Instruments, Heater Hook-up Wire, Heating Cable Systems, Immersion Heaters, Process Air and Duct, Heaters, Radiant Heaters, Strip Heaters, Tubular Heaters

• ***click here to go to the omega.com home page*** •